http://www.wsv-valve.com sale@weidouli.com 0086-577-86921659

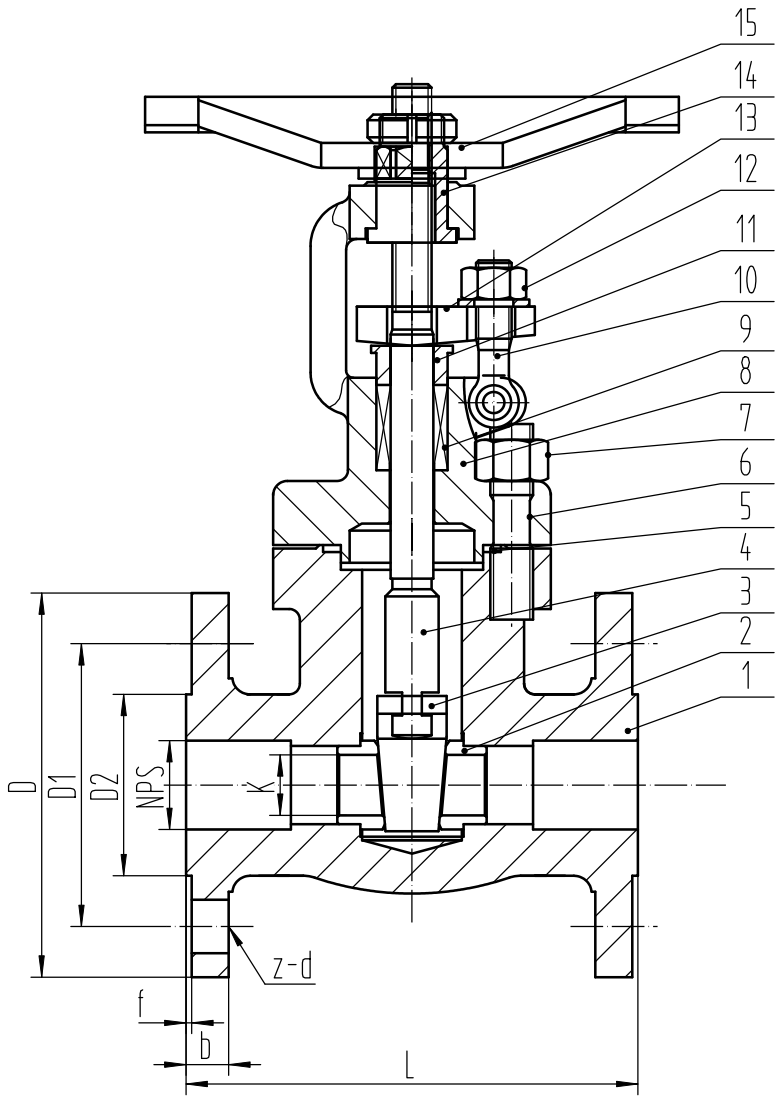

Features:

1. Design standard:API 602
2. Face to face:ASME 16.10
3. Flange ends:ASME B16.5
4. Test& inspection:API 598

BODY MARKING

WSV
SIZE
RATING
MATERIAL
HEAT NO.

SPECIFICATION			
Pressure	CLASS	150LB	
Pressure test	Shell(hydrostatic)	3.0	MPa
	Seat(hydrostatic)	2.2	
	Back Seat(hydrostatic)	2.2	
	Seat (air test)	0.6	
Application temp.	-29° C~325° C		

NO.	CODE	MAIN PARTS	QTY	MATERIAL	REMARKS
15	WSV022-2008	Handhweel	/	DI+Anti corrosive rubber	
14	Z41W-150Lb-08	Stem nut	/	410	
13	Z41W-150Lb-07	Gland flange	/	A351 CF8	
12	GB/T 6175-2000	Nut	/	A194 8	
11	Z41W-150Lb-06	Gland bushing	/	B462 N08020	
10	GB/T 798-1988	Bolt	/	A193 B8	
9	WSV002-2008	Packing	/	Graphite	
8	Z41W-150Lb-05	Bonnet	/	A351 CN7M	
7	GB/T 6175-2000	Nut	/	A194 8	
6	GB/T 901-1988	Stud	/	A193 B8	
5	WSV006-2008	Gasket	/	Alloy 20+Graphite	
4	Z41W-150Lb-04	Stem	/	B462 N08020	
3	Z41W-150Lb-03	Wedge	/	B462 N08020	
2	Z41W-150Lb-02	Seat	/	B462 N08020	
1	Z41W-150Lb-01	Body	/	A351 CN7M	

Main Dimension(mm)

Item code	L	D	D1	D2	K	b	f	z-d
Z41W-150Lb-1/2″	108	89	60.5	35	11	12	1.6	4-15
Z41W-150Lb-1″	127	108	79.5	51	17	12	1.6	4-15
Z41W-150Lb-1-1/2″	165	127	98.5	73	29	15	1.6	4-15

M					2018.08.17
SALES	DRAWN	ASSESS	AUTHORIZE	REV.	DATE
DRW. NO.	Z41W-150LB		Ref.No.		
NOTES					

WEIDOULI VALVES CO.,LTD.

DESCRIPTION

GATE VALVE,FLANGED RF
150LB,A351 CN7M MATERIAL
HANDWHEEL OPERATION

DRAWING

WSV®
Weidouli special valve

http://www.wsv-valve.com sale@weidouli.com 0086-577-86921659

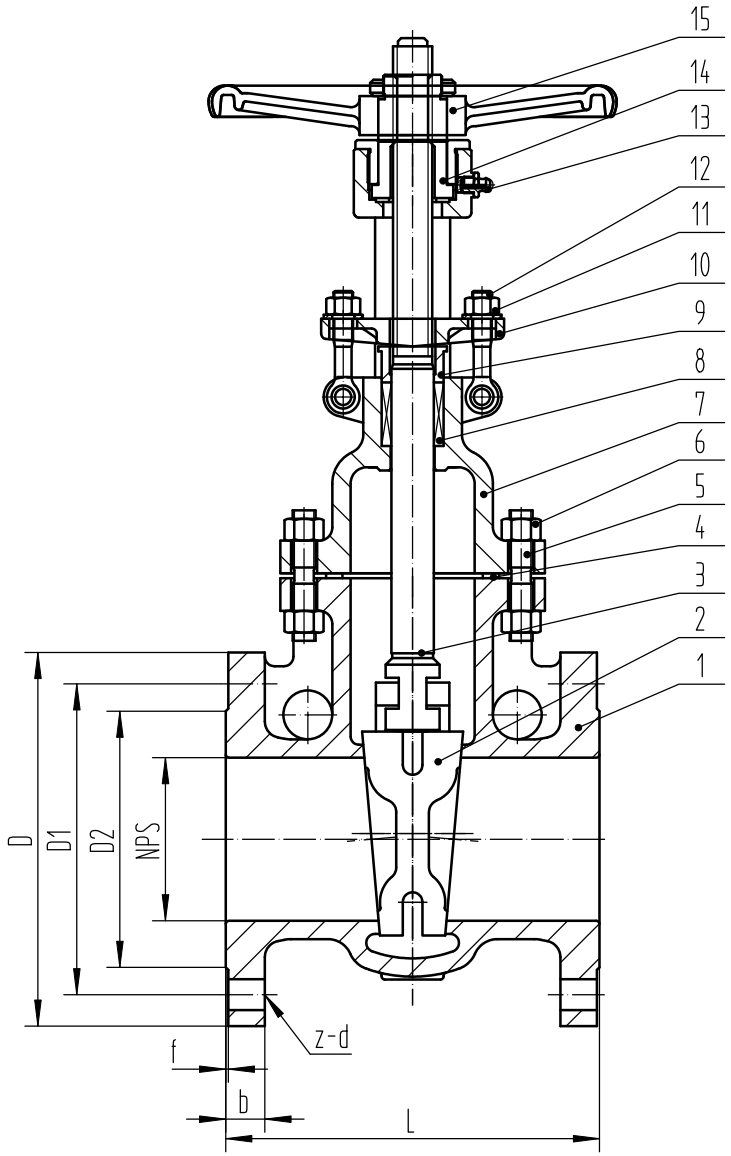

Features:

1. Design standard:API 600
2. Face to face:ASME B16.10
3. Flange ends: ASME B16.5
4. Test& inspection: API 598

BODY MARKING

WSV
SIZE
RATING
MATERIAL
HEAT NO.

SPECIFICATION			
Pressure	CLASS	150LB	
Pressure test	Shell(hydrostatic)	3.0	MPa
	Seat(hydrostatic)	2.2	
	Back Seat(hydrostatic)	2.2	
	Seat (air test)	0.6	
Application Temp.	-29° C~325° C		

NO.	CODE	MAIN PARTS	QTY	MATERIAL	REMARKS
15	WSV022-2008	Handwheel	/	DI+Anti corrosive rubber	
14	Z40W-150Lb-08	Stem nut	/	ZQAL9-4	
13	JB/T 7940.1-1995	Grease nipple	/	Bronze	
12	GB/T 798-1988	Bolt	/	A193 B8	
11	GB/T 6170-2000	Nut	/	A194 8	
10	Z40W-150Lb-07	Packing gland	/	A351 CF8	
9	Z40W-150Lb-06	Gland bushing	/	B462 N08020	
8	WSV022-2008	Packing	/	Flexible graphite	
7	Z40W-150Lb-05	Bonnet	/	A351 CN7M	
6	GB/T 6175-2000	Nut	/	A194 8	
5	GB/T 901-1988	Stud	/	A193 B8	
4	Z40W-150Lb-04	Gasket	/	Alloy 20+Flexible graphite	
3	Z40W-150Lb-03	Stem	/	B462 N08020	
2	Z40W-150Lb-02	Wedge	/	A351 CN7M	
1	Z40W-150Lb-01	Body	/	A351 CN7M	

Main Dimension(mm)

Item code	L	D	D1	D2	b	f	z-d
Z40W-150Lb-2″	178	152	120.5	92	16	1.6	4-19
Z40W-150Lb-3″	203	190	152.5	127	19	1.6	4-19
Z40W-150Lb-4″	229	229	190.5	157	24	1.6	8-19
Z40W-150Lb-6″	267	279	241.5	216	26	1.6	8-22
Z40W-150Lb-8″	292	343	298.5	270	29	1.6	8-22

M					2018.08.17
SALES	DRAWN	ASSESS	AUTHORIZE	REV.	DATE
DRW. NO.	Z40W-150LB		Ref.No.		
NOTES					

WEIDOULI VALVES CO.,LTD.

DESCRIPTION

GATE VALVE,FLANGED RF
150LB,A351 CN7M MATERIAL
HANDWHEEL OPERATION

DRAWING

WSV®
Weidouli special valve