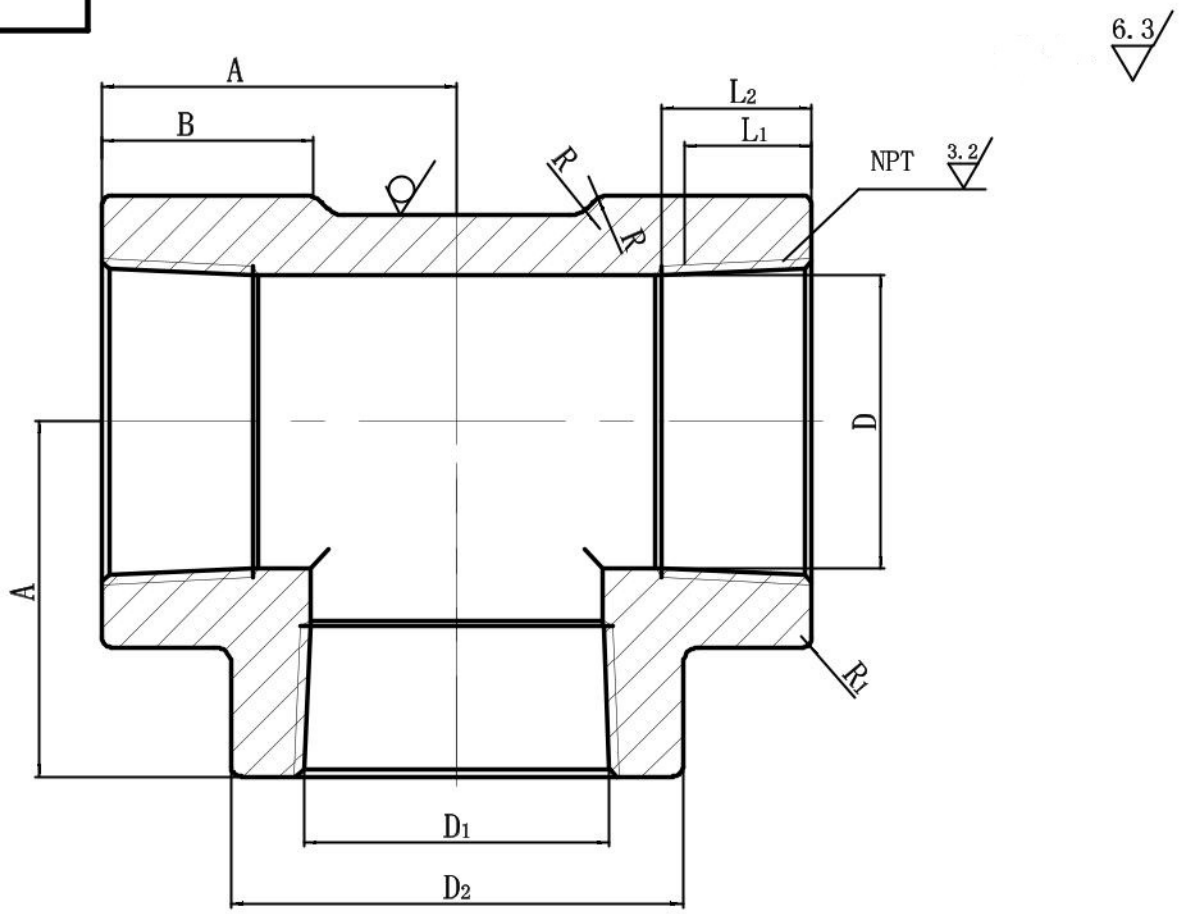

in	DN	D2	B	A	D1	L1 min	L2 min	D	R	kg
1/8	6	22	14	21	8.73	6.7	10	8.2	2	0.22
1/4	8	25	15	25	11.35	10.2	13	10.5	2	0.22
3/8	10	33	17	28	14.79	10.8	14.5	14.2	2	0.40
1/2	15	38	18	33	18.32	13.6	18	17.6	3	0.58
3/4	20	46	19	38	23.66	13.9	19	22.8	3	0.90
1	25	56	22	44	29.69	17.3	22	28.7	3.5	1.46
11/4	32	62	26	51	38.45	18.0	23	37.3	3.5	1.90
11/2	40	75	30	60	44.52	18.4	24	43.4	4	3.40
2	50	84	32	64	56.55	19.2	25	55.3	5	3.80
21/2	65	102	45	83	67.61	28.9	34	66.1	5	7.20
3	80	121	45	95	83.52	30.5	35	81.9	6	10.7
4	100	152	52	114	108.89	33.0	38	107.1	6	17.0

PTV® Solutions

			Tee	GB/T14383-2008 ASME B16.11-2016
			1/8″ - 4″	3000 Lb
				Material: SS316