http://www.wsv-valve.com sale@weidouli.com 0086-577-86921659

Features:

1. Design standard:API 594-2022/9
2. Face to face:API 594-2022/9
3. Flange ends: ASME B16.5-2020
4. Test& inspection: API 598-2016/10

SPECIFICATION			
Pressure	ANSI Class 150LB		
Pressure test	Shell(hydrostatic)	3.0	Mpa
	Seat(hydrostatic)	2.2	
Application Temp.	-29° C~ 120° C		

Main Dimension(mm)

Item Code	L	D1	D
H76F-150Lb-2″	60	58	103
H76F-150Lb-3″	73	90	135
H76F-150Lb-4″	73	110	173
H76F-150Lb-6″	98	156	220
H76F-150Lb-8″	127	204	278
H76F-150Lb-10″	146	266	337
H76F-150Lb-12″	181	324	407

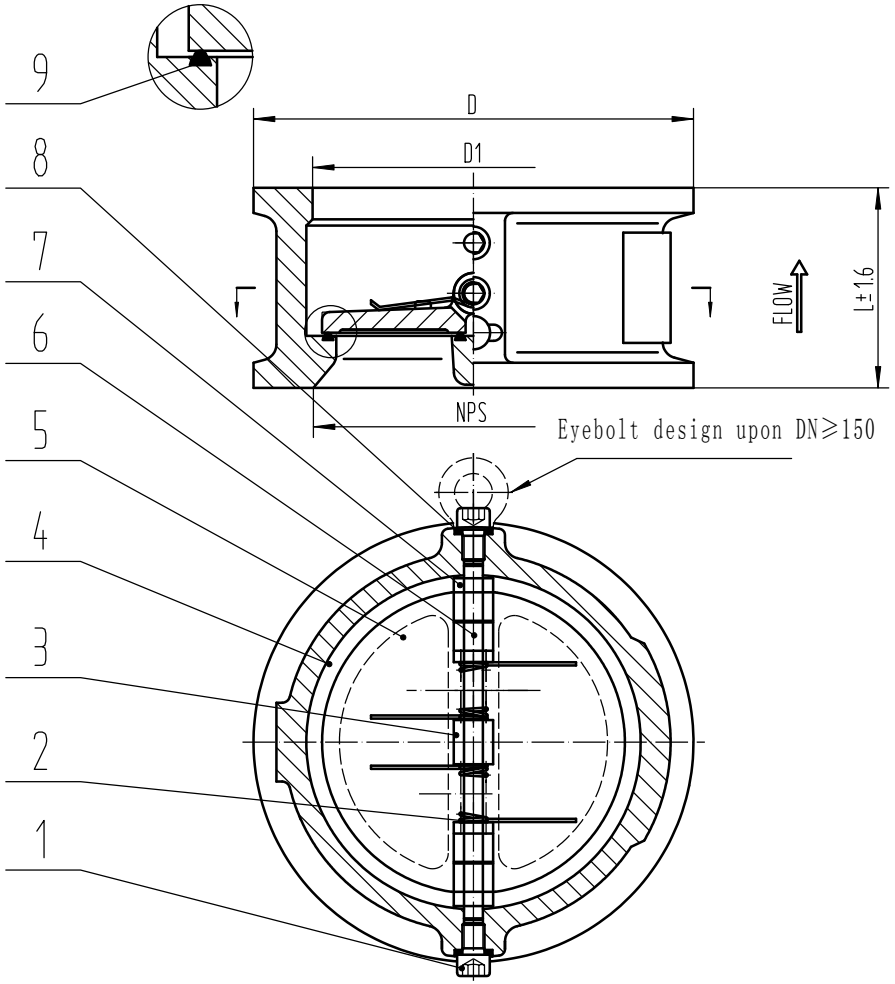

NO.	CODE	MAIN PARTS	QTY	MATERIAL	REMARKS
9	H76F-150Lb-00	Seat	/	Viton	
8	H76F-150Lb-00	Gasket	/	PTFE	
7	H76F-150Lb-00	Locating piece	/	A182 F316	
6	H76F-150Lb-00	Pin	/	A182 F316	
5	H76F-150Lb-00	Disc	/	A351 CF8M	
4	H76F-150Lb-00	Body	/	A351 CF8M	
3	H76F-150Lb-00	Locating cover	/	A182 F316	
2	H76F-150Lb-00	Spring	/	Inconel X750	
1	H76F-150Lb-00	Screw	/	A182 F316	

BODY MARKING
WSV
SIZE
RATING
MATERIAL
HEAT NO.

Z					
SALES	DRAWN	ASSESS	AUTHORIZE	REV.	DATE
DRW. NO.	H76F-150LB-00		Ref. No.		
NOTES	ITEM 6-12				
WEIDOULI VALVES CO.,LTD.					

DESCRIPTION

DUAL PLATE CHECK VALVE
WAFER TYPE,150LB
BODY:A351 CF8M

DRAWING

WSV®
Weidouli special valve