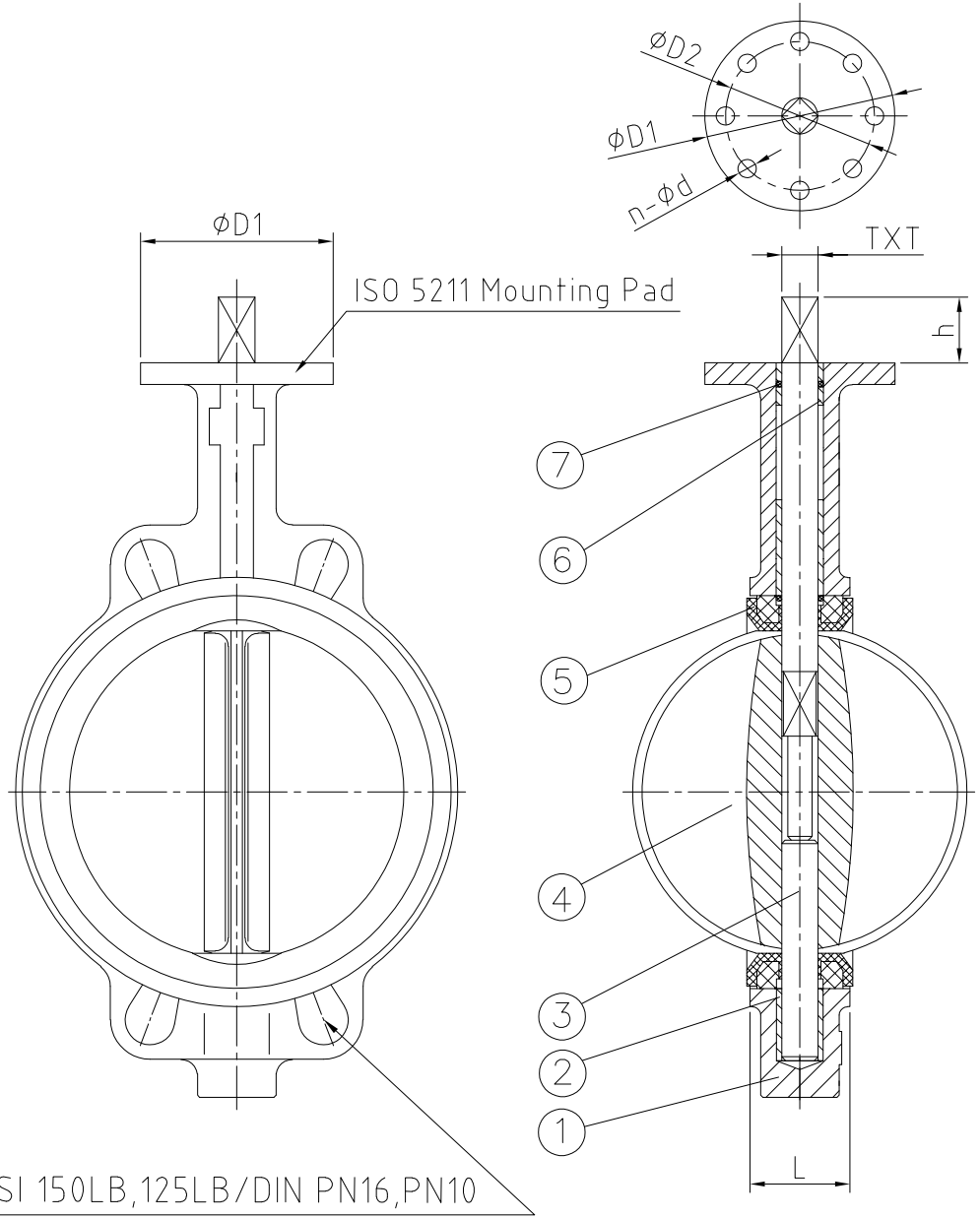


| SIZE | DN | L | Between Flange | ISO 5211 PAD NO. | ØD1 | ØD2 | n-Ød | TXT | h | Torque N*M | Weight |
|---|---|---|---|---|---|---|---|---|---|---|---|
| 1 1/2" | 40 | 42 | 150LB/125LB/PN16/PN10 | F05 | Ø90 | Ø50 | 4-Ø8 | 9X9 | 30 | 17 | 2.2 KG |
| 2" | 50 | 42 | 150LB/125LB/PN16/PN10 | F05 | Ø90 | Ø50 | 4-Ø8 | 9X9 | 30 | 17 | 2.5 KG |
| 2 1/2" | 65 | 44.7 | 150LB/125LB/PN16/PN10 | F05 | Ø90 | Ø50 | 4-Ø8 | 9X9 | 30 | 25 | 2.7 KG |
| 3" | 80 | 45.2 | 150LB/125LB/PN16/PN10 | F05 | Ø90 | Ø50 | 4-Ø8 | 9X9 | 30 | 38 | 3.5 KG |
| 4" | 100 | 52.1 | 150LB/125LB/PN16/PN10 | F07 | Ø90 | Ø70 | 4-Ø10 | 11X11 | 30 | 56 | 4.4 KG |
| 5" | 125 | 54.4 | 150LB/125LB/PN16/PN10 | F07 | Ø90 | Ø70 | 4-Ø10 | 14X14 | 30 | 90 | 6.1 KG |
| 6" | 150 | 55.8 | 150LB/125LB/PN16/PN10 | F07 | Ø90 | Ø70 | 4-Ø10 | 14X14 | 30 | 124 | 7 KG |
| 8" | 200 | 60.6 | 150LB/125LB/PN16/PN10 | F10 | Ø125 | Ø102 | 4-Ø12 | 17X17 | 40 | 233 | 15 KG |
| 10" | 250 | 65.6 | 150LB/125LB/PN16/PN10 | F10 | Ø125 | Ø102 | 4-Ø12 | 22X22 | 45 | 392 | 21 KG |
| 12" | 300 | 76.9 | 150LB/125LB/PN16/PN10 | F10 | Ø125 | Ø102 | 4-Ø12 | 22X22 | 45 | 560 | 28 KG |
| 14" | 350 | 76.2 | 150LB/125LB/PN16/PN10 | F10 | Ø125 | Ø102 | 4-Ø12 | 22X22 | 45 | 736 | 41 KG |
| 16" | 400 | 85.7 | 150LB/125LB/PN16/PN10 | F14 | Ø175 | Ø140 | 4-Ø14 | 27X27 | 45 | 1011 | 65 KG |

* 1. The torque without Safety factor.
* 2. Safety factor of 1.3 is recommended.

| NO. | NAME | MATERIAL | QTY | REMARK |
|---|---|---|---|---|
| 7 | O-Ring | Viton | | |
| 6 | Short Bushing | PTFE | 2 | |
| 5 | Seat | RPTFE | 1 | |
| 4 | Disc | A351 CF3M | 1 | |
| 3 | Stem | A276 SS316L | 1 | |
| 2 | Long Bushing | PTFE | 2 | |
| 1 | Body | A351 CF3M | 1 | |

| TEST PRESSURE | CWP:16Bar | SHELL | SEAL |
|---|---|---|---|
| | HYDROSTATIC | 24 bar | 17.6 bar |
| | AIR | 6 bar | 6 bar |

| STANDARD | |
|---|---|
| DESIGN CODE | API 609 |
| INSPECTION & TEST | API 598 |
| END STANDARD | ASME 150LB, 125LB / DIN PN16, PN10 |
| FACE TO FACE | API 609 |
| WORKING TEMPERATURE | -29C° ~ +120C° |

TITLE: CONCENTRIC BUTTERFLY VALVE SQUARE BARE SHAFT
NPS 1 1/2"~16" - 150LB/125LB/PN16/PN10 - WAFER - CF3M/SS316L/RPTFE

| | | | |
|---|---|---|---|
| APPROVED | | DWG NO. | REV |
| CHECKED | | | |
| DRAWN | | | |
| DESIGNED | | SCALE | UNIT mm |

PTV® Solutions

| | | | |
|---|---|---|---|
| 1 | Nondestructive Testing | | |
| 1.1 | Pressure Test | Mandatory | Yes |
| 1.2 | Chemical composition certification | Mandatory | Yes |
| 1.3 | Penetrant Test | All Body Surface | Yes |
| 1.4 | Magnetic particle testing | All Body Surface | Yes |