Taiwan
5F-1, No. 936
Wen-sin Road, Sec. 4,
Taichung City 406,
T +886 (4) 2231 0059
F +886 (4) 2236 0236

Shanghai
No. 8, Lane 1
Xin-Xiao Road
Shanghai, 201612, China
T +86 (21) 5777 3810
F +86 (21) 5777 3819

DIE ERSTE INDUSTRY CO., LTD.
www.die-erste.com
info@die-erste.com

Manual Type Ductile Iron Knife Gate Valve
Model KG Series

- **Valve Design**
  Manual Type Knife Gate Valve
- **Size**
  2” to 3” (DN 50 to DN 80)
- **Pressure Rating**
  CLASS 150 / PN 10 / PN 16
- **Body Material**
  Ductile Iron
- **End Connection**
  Lug Type
- **Temperature Range**
  -20°C to 120°C (-4°F to 248°F) with EPDM seat
- **Standards and Specifications**
  Design and test standard according to MSS-SP81
  DIN EN 10204 3.1 Certificate
  PED 97/23/EC; ISO 9001

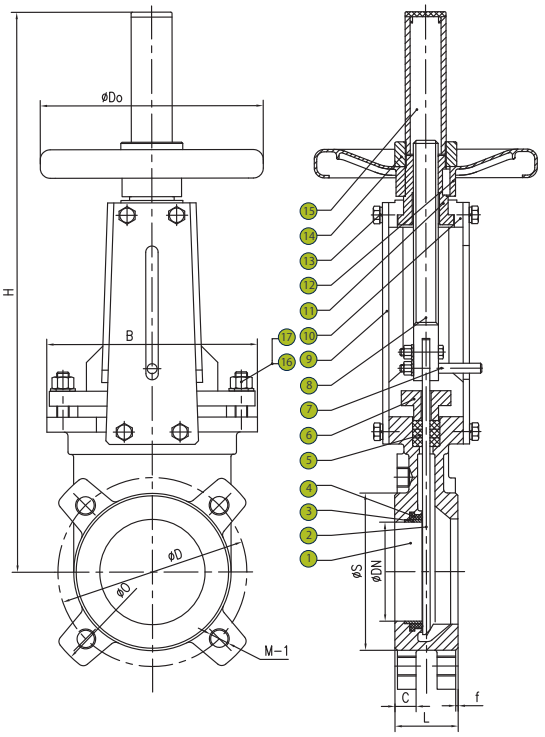

MATERIAL LIST

NO	PART NAME	MATERIAL
1	BODY	GGG40
2	GATE	SS 304
3	SEAT RETAINER RING	SS 304
4	SEAT	EPDM
5	PACKING	PTFE + SILICON
6	GLAND FOLLOWER	GGG40
7	POSITION INDICATOR	SS 420
8	STEM	ASTM A276 420
9	SUPPORT PLATES	STEEL+EPOXY BAKED
10	STEM PROTECTOR	ASTM A216 WCB
11	STEM NUT	ASTM B148 C95200
12	HANDWHEEL	CARBON STEEL
13	BOLT	ASTM A193 B8
14	HANDWHEEL NUT	ASTM A105
15	STEM PROTECTOR	ASTM A36
16	BOLT	ASTM A193 B8
17	NUT	ASTM A194 8

Working Pressure
10 bar

DIMENSION LIST

SIZE	d	L	O	D	S	C	f	M-1 (UNC)	B	H	Do
2"	50	46	152.4	120.7	95	16	1.5	4-M5/8"-11	136	375	180
2½"	65	46	177.8	139.7	110	16	1.5	4-M5/8"-11	150	420	180
3"	80	49	190.5	152.4	127	17	1.5	4-M5/8"-11	170	450	200

Knife Gate Body Design
Compact and thin body design greatly reduces the space and weight needed for installation. Stainless Steel knife gate disc with polished surface and thicker dimension eliminate the distortion caused by differential pressure and seals the fluid with the cutting action.

Applications
Knife gate valve are suitable for use in pulp and paper, coal & mining industry, slurries, ashes, sewage. It has become an ideal sealing solution for regulating and reducing role in above situations

DIE ERSTE reserves the right to change product design and specifications without notice.
Copyright © 2012 by DIE ERSTE INDUSTRY CO., LTD.

ISOQAR QUALITY ASSURED FIRM ISO 9001
DIE ERSTE INDUSTRY CO., LTD. is an ISO 9001:2008 DIE ERSTE GROUP registered company with operations in Taiwan and China.

Taiwan
5F-1, No. 936
Wen-sin Road, Sec. 4,
Taichung City 406,
T +886 (4) 2231 0059
F +886 (4) 2236 0236

Shanghai
No. 8, Lane 1
Xin-Xiao Road
Shanghai, 201612, China
T +86 (21) 5777 3810
F +86 (21) 5777 3819

DIE ERSTE INDUSTRY CO., LTD.
www.die-erste.com
info@die-erste.com

Manual Type Ductile Iron Knife Gate Valve
Model KG Series

- **Valve Design**
  Manual Type Knife Gate Valve
- **Size**
  4" to 8" (DN 50 to DN 200)
- **Pressure Rating**
  CLASS 150 / PN 10 / PN 16
- **Body Material**
  Ductile Iron
- **End Connection**
  Lug Type
- **Temperature Range**
  -20°C to 120°C (-4°F to 248°F) with EPDM seat
- **Standards and Specifications**
  Design and test standard according to MSS-SP81
  DIN EN 10204 3.1 Certificate
  PED 97/23/EC; ISO 9001

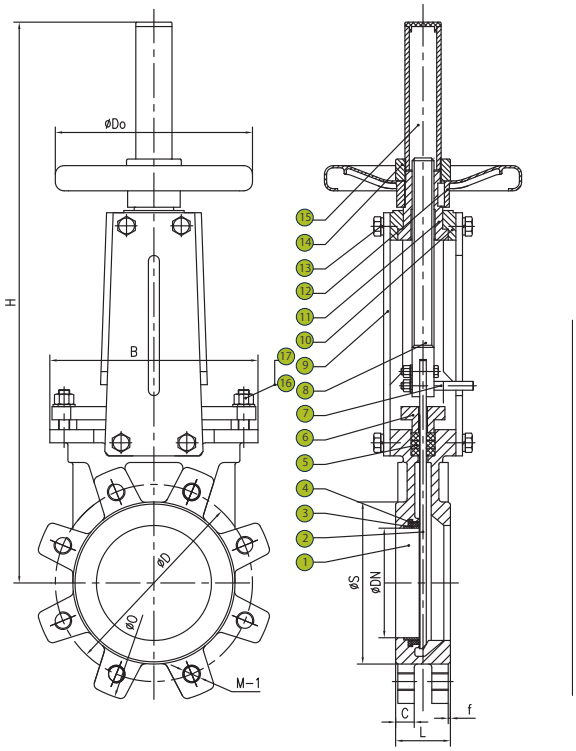

MATERIAL LIST

NO	PART NAME	MATERIAL
1	BODY	GGG40
2	GATE	SS 304
3	SEAT RETAINER RING	SS 304
4	SEAT	EPDM
5	PACKING	PTFE + SILICON
6	GLAND FOLLOWER	GGG40
7	POSITION INDICATOR	SS 420
8	STEM	ASTM A276 420
9	SUPPORT PLATES	ASTM A36
10	STEM PROTECTOR	ASTM A216 WCB
11	STEM NUT	ASTM B148 C95200
12	HANDWHEEL	CARBON STEEL
13	BOLT	ASTM A193 B8
14	HANDWHEEL NUT	ASTM A105
15	STEM PROTECTOR	ASTM A36
16	BOLT	ASTM A193 B8
17	NUT	ASTM A194 8

Working Pressure
10 bar

DIMENSION LIST

SIZE	d	L	O	D	S	C	f	M-1 (UNC)	B	H	Do
4"	100	51	228.6	190.5	148	17	1.5	8-M5/8"-11	190	512	200
5"	125	57	254	215.9	174	17	1.5	8-M3/4"-10	212	570	220
6"	150	57	279.4	241.3	199	21	1.5	8-M3/4"-10	230	665	250
8"	200	70	342.9	298.5	250	21	1.5	8-M3/4"-10	286	825	300

Knife Gate Body Design
Compact and thin body design greatly reduces the space and weight needed for installation. Stainless Steel knife gate disc with polished surface and thicker dimension eliminate the distortion caused by differential pressure and seals the fluid with the cutting action.

Applications
Knife gate valve are suitable for use in pulp and paper, coal & mining industry, slurries, ashes, sewage. It has become an ideal sealing solution for regulating and reducing role in above situations

DIE ERSTE reserves the right to change product design and specifications without notice.
Copyright © 2012 by DIE ERSTE INDUSTRY CO., LTD.

ISOQAR QUALITY ASSURED FIRM ISO 9001
DIE ERSTE INDUSTRY CO., LTD. is an ISO 9001:200 DIE ERSTE GROUP registered company with operations in Taiwan and China.

Taiwan
5F-1, No. 936
Wen-sin Road, Sec. 4,
Taichung City 406,
T +886 (4) 2231 0059
F +886 (4) 2236 0236

Shanghai
No. 8, Lane 1
Xin-Xiao Road
Shanghai, 201612, China
T +86 (21) 5777 3810
F +86 (21) 5777 3819

DIE ERSTE INDUSTRY CO., LTD.
www.die-erste.com
info@die-erste.com

Manual Type Ductile Iron Knife Gate Valve
Model KG Series

- **Valve Design**
  Manual Type Knife Gate Valve
- **Size**
  10" to 12" (DN 250 to DN 300)
- **Pressure Rating**
  CLASS 150 / PN 10 / PN 16
- **Body Material**
  Ductile Iron
- **End Connection**
  Lug Type
- **Temperature Range**
  -20°C to 120°C (-4°F to 248°F) with EPDM seat
- **Standards and Specifications**
  Design and test standard according to MSS-SP81
  DIN EN 10204 3.1 Certificate
  PED 97/23/EC; ISO 9001

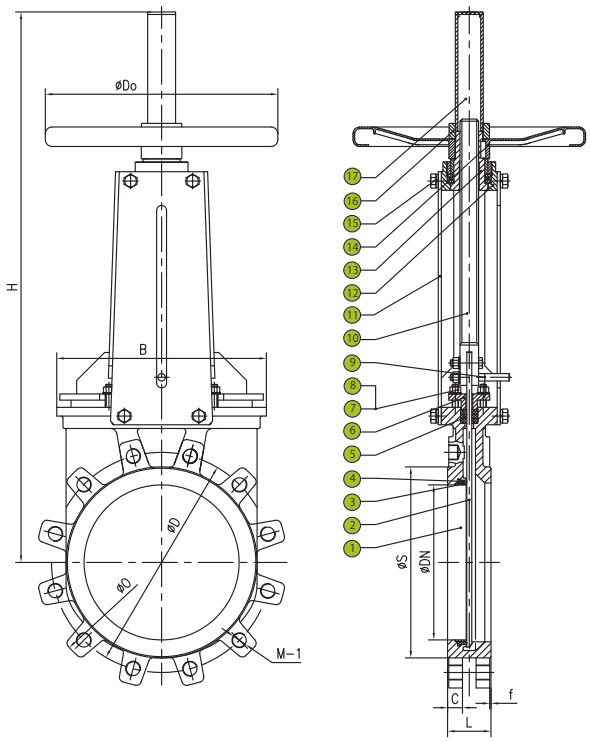

MATERIAL LIST

NO	PART NAME	MATERIAL
1	BODY	GGG40
2	GATE	SS 304
3	SEAT RETAINER RING	SS 304
4	SEAT	EPDM
5	PACKING	PTFE + SILICON
6	GLAND FOLLOWER	GGG40
7	BOLT	ASTM A193 B8
8	NUT	ASTM A194 8
9	POSITION INDICATOR	SS 420
10	STEM	ASTM A276 420
11	SUPPORT PLATES	ASTM A36
12	STEM PROTECTOR	ASTM A216 WCB
13	STEM NUT	ASTM B148 C95200
14	HANDWHEEL	CARBON STEEL
15	BOLT	ASTM A193 B8
16	HANDWHEEL NUT	ASTM A105
17	STEM PROTECTOR	ASTM A36

Working Pressure
7 bar

DIMENSION LIST

SIZE	d	L	O	D	S	C	f	M-1 (UNC)	B	H	Do
10"	250	70	406.4	361.9	324	24	1.5	12-M7/8"-9	338	1000	350
12"	300	76	482.6	431.8	381	24	1.5	12-M7/8"-9	388	1155	350

Knife Gate Body Design
Compact and thin body design greatly reduces the space and weight needed for installation. Stainless Steel knife gate disc with polished surface and thicker dimension eliminate the distortion caused by differential pressure and seals the fluid with the cutting action.

Applications
Knife gate valve are suitable for use in pulp and paper, coal & mining industry, slurries, ashes, sewage. It has become an ideal sealing solution for regulating and reducing role in above situations

DIE ERSTE reserves the right to change product design and specifications without notice.
Copyright © 2012 by DIE ERSTE INDUSTRY CO., LTD.

Taiwan
5F-1, No. 936
Wen-sin Road, Sec. 4,
Taichung City 406,
T +886 (4) 2231 0059
F +886 (4) 2236 0236

Shanghai
No. 8, Lane 1
Xin-Xiao Road
Shanghai, 201612, China
T +86 (21) 5777 3810
F +86 (21) 5777 3819

DIE ERSTE INDUSTRY CO., LTD.
www.die-erste.com
info@die-erste.com

Manual Type Stainless Steel Knife Gate Valve
Model KG Series

- **Valve Design**
  Manual Type Knife Gate Valve
- **Size**
  2" to 3" (DN 50 to DN 80)
- **Pressure Rating**
  CLASS 150 / PN 10 / PN 16
- **Body Material**
  ASTM A351 CF8M
- **End Connection**
  Lug Type
- **Temperature Range**
  -20°C to 120°C (-4°F to 248°F) with EPDM seat
- **Standards and Specifications**
  Design and test standard according to MSS-SP81
  DIN EN 10204 3.1 Certificate
  PED 97/23/EC; ISO 9001

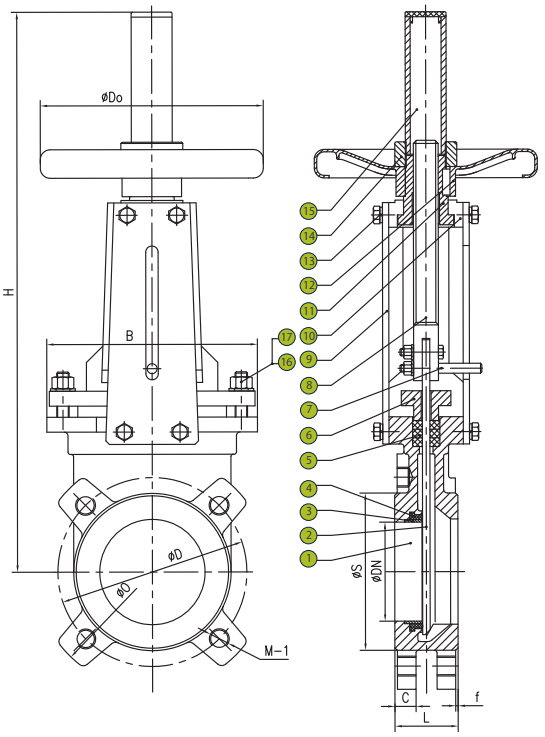

MATERIAL LIST

NO	PART NAME	MATERIAL
1	BODY	ASTM A351 CF8M
2	GATE	SS 316
3	SEAT RETAINER RING	SS 316
4	SEAT	EPDM
5	PACKING	VITON
6	GLAND FOLLOWER	ASTM A351 CF8M
7	POSITION INDICATOR	SS 420
8	STEM	ASTM A182 F316
9	SUPPORT PLATES	ASTM A36
10	STEM PROTECTOR	ASTM A351 CF8M
11	STEM NUT	ASTM B148 C95200
12	HANDWHEEL	CARBON STEEL
13	BOLT	ASTM A193 B8
14	HANDWHEEL NUT	ASTM A105
15	STEM PROTECTOR	ASTM A36
16	BOLT	ASTM A193 B8
17	NUT	ASTM A194 8

Working Pressure
10 bar

DIMENSION LIST

SIZE	d	L	O	D	S	C	f	M-1 (UNC)	B	H	Do
2"	50	46	152.4	120.7	95	16	1.5	4-M5/8"-11	136	375	180
2½"	65	46	177.8	139.7	110	16	1.5	4-M5/8"-11	150	420	180
3"	80	49	190.5	152.4	127	17	1.5	4-M5/8"-11	170	450	200

Knife Gate Body Design
Compact and thin body design greatly reduces the space and weight needed for installation. Stainless Steel knife gate disc with polished surface and thicker dimension eliminate the distortion caused by differential pressure and seals the fluid with the cutting action.

Applications
Knife gate valve are suitable for use in pulp and paper, coal & mining industry, slurries, ashes, sewage. It has become an ideal sealing solution for regulating and reducing role in above situations

DIE ERSTE reserves the right to change product design and specifications without notice.
Copyright © 2012 by DIE ERSTE INDUSTRY CO., LTD.

Taiwan
5F-1, No. 936
Wen-sin Road, Sec. 4,
Taichung City 406,
T +886 (4) 2231 0059
F +886 (4) 2236 0236

Shanghai
No. 8, Lane 1
Xin-Xiao Road
Shanghai, 201612, China
T +86 (21) 5777 3810
F +86 (21) 5777 3819

DIE ERSTE INDUSTRY CO., LTD.
www.die-erste.com
info@die-erste.com

Manual Type Stainless Steel Knife Gate Valve
Model KG Series

- **Valve Design**
  Manual Type Knife Gate Valve
- **Size**
  4" to 8" (DN 50 to DN 200)
- **Pressure Rating**
  CLASS 150 / PN 10 / PN 16
- **Body Material**
  ASTM A351 CF8M
- **End Connection**
  Lug Type
- **Temperature Range**
  -20°C to 120°C (-4°F to 248°F) with EPDM seat
- **Standards and Specifications**
  Design and test standard according to MSS-SP81
  DIN EN 10204 3.1 Certificate
  PED 97/23/EC; ISO 9001

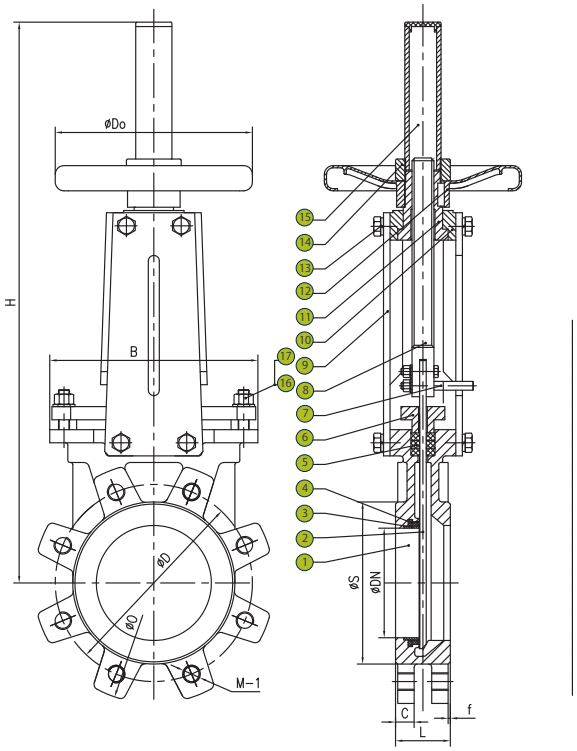

MATERIAL LIST

NO	PART NAME	MATERIAL
1	BODY	ASTM A351 CF8M
2	GATE	SS 316
3	SEAT RETAINER RING	SS 316
4	SEAT	EPDM
5	PACKING	VITON
6	GLAND FOLLOWER	ASTM A351 CF8M
7	POSITION INDICATOR	SS 420
8	STEM	ASTM A182 F316
9	SUPPORT PLATES	ASTM A36
10	STEM PROTECTOR	ASTM A351 CF8M
11	STEM NUT	ASTM B148 C95200
12	HANDWHEEL	CARBON STEEL
13	BOLT	ASTM A193 B8
14	HANDWHEEL NUT	ASTM A105
15	STEM PROTECTOR	ASTM A36
16	BOLT	ASTM A193 B8
17	NUT	ASTM A194 8

Working Pressure
10 bar

DIMENSION LIST

SIZE	d	L	O	D	S	C	f	M-1 (UNC)	B	H	Do
4"	100	51	228.6	190.5	148	17	1.5	8-M5/8"-11	190	512	200
5"	125	57	254	215.9	174	17	1.5	8-M3/4"-10	212	570	220
6"	150	57	279.4	241.3	199	21	1.5	8-M3/4"-10	230	665	250
8"	200	70	342.9	298.5	250	21	1.5	8-M3/4"-10	286	825	300

Knife Gate Body Design

Compact and thin body design greatly reduces the space and weight needed for installation. Stainless Steel knife gate disc with polished surface and thicker dimension eliminate the distortion caused by differential pressure and seals the fluid with the cutting action.

Applications

Knife gate valve are suitable for use in pulp and paper, coal & mining industry, slurries, ashes, sewage. It has become an ideal sealing solution for regulating and reducing role in above situations

DIE ERSTE reserves the right to change product design and specifications without notice.
Copyright © 2012 by DIE ERSTE INDUSTRY CO., LTD.

Taiwan
5F-1, No. 936
Wen-sin Road, Sec. 4,
Taichung City 406,
T +886 (4) 2231 0059
F +886 (4) 2236 0236

Shanghai
No. 8, Lane 1
Xin-Xiao Road
Shanghai, 201612, China
T +86 (21) 5777 3810
F +86 (21) 5777 3819

DIE ERSTE INDUSTRY CO., LTD.
www.die-erste.com
info@die-erste.com

Manual Type Stainless Steel Knife Gate Valve
Model KG Series

- **Valve Design**
  Manual Type Knife Gate Valve
- **Size**
  10" to 12" (DN 250 to DN 300)
- **Pressure Rating**
  CLASS 150 / PN 10 / PN 16
- **Body Material**
  ASTM A351 CF8M
- **End Connection**
  Lug Type
- **Temperature Range**
  -20°C to 120°C (-4°F to 248°F) with EPDM seat
- **Standards and Specifications**
  Design and test standard according to MSS-SP81
  DIN EN 10204 3.1 Certificate
  PED 97/23/EC; ISO 9001

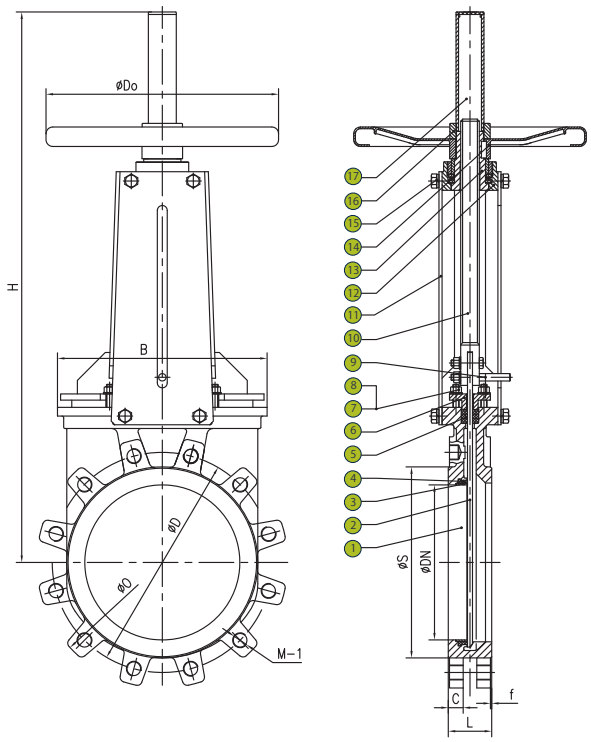

MATERIAL LIST

NO	PART NAME	MATERIAL
1	BODY	ASTM A351 CF8M
2	GATE	SS 316
3	SEAT RETAINER RING	SS 316
4	SEAT	EPDM
5	PACKING	PTFE + Silicon
6	GLAND FOLLOWER	ASTM A351 CF8M
7	BOLT	ASTM A193 B8
8	NUT	ASTM A194 8
9	POSITION INDICATOR	SS 420
10	STEM	ASTM A182 F316
11	SUPPORT PLATES	ASTM A36
12	STEM PROTECTOR	ASTM A351 CF8M
13	STEM NUT	ASTM B148 C95200
14	HANDWHEEL	CARBON STEEL
15	BOLT	ASTM A193 B8
16	HANDWHEEL NUT	ASTM A105
17	STEM PROTECTOR	ASTM A36

Working Pressure
7 bar

DIMENSION LIST

SIZE	d	L	O	D	S	C	f	M-1 (UNC)	B	H	Do
10"	250	70	406.4	361.9	324	24	1.5	12-M7/8"-9	338	1000	350
12"	300	76	482.6	431.8	381	24	1.5	12-M7/8"-9	388	1155	350

Knife Gate Body Design

Compact and thin body design greatly reduces the space and weight needed for installation. Stainless Steel knife gate disc with polished surface and thicker dimension eliminate the distortion caused by differential pressure and seals the fluid with the cutting action.

Applications

Knife gate valve are suitable for use in pulp and paper, coal & mining industry, slurries, ashes, sewage. It has become an ideal sealing solution for regulating and reducing role in above situations

DIE ERSTE reserves the right to change product design and specifications without notice.
Copyright © 2012 by DIE ERSTE INDUSTRY CO., LTD.

ISOQAR QUALITY ASSURED FIRM ISO 9001
DIE ERSTE INDUSTRY CO., LTD. is an ISO 9001:200 DIE ERSTE GROUP registered company with operations in Taiwan and China.