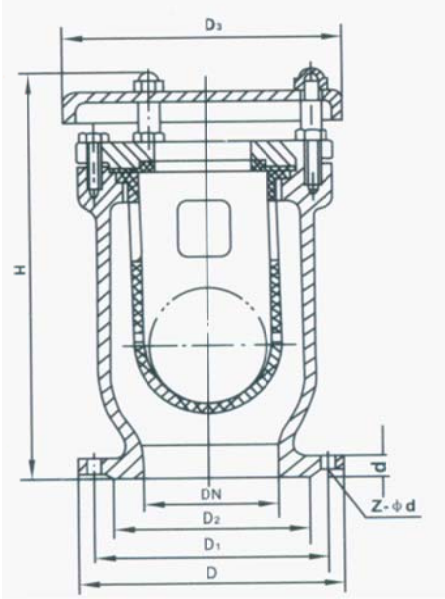

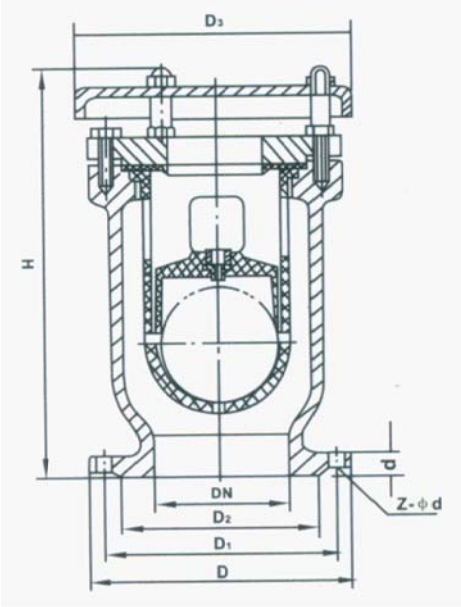

DIMENSIONS

公称通径 DM(mm)	D	D1	D2	D3	H	Z-ϕd
50	160	125	102	175	270	4-14
80	195	160	135	215	300	4-18
100	215	180	158	230	310	8-18
150	280	240	212	265	395	8-23
200	335	295	268	380	455	8-23

DIE ERSTE INDUSTRY CO., LTD,
TAICHANG, TAIWAN

SHEET 1 OF 1	DRWN BY: ANGELA LIAO 04/22/14	APPROVAL: BIBBY WANG 04/22/14	UNIT: mm	**DO NOT SCALE DRAWING**	TITLE: **AIR RELEASE VALVE**	REV **1.0**
REMARK			PROJECT:	DWG. NO.		

PROPRIETARY AND CONFIDENTIAL
THE INFORMATION CONTAINED IN THIS DRAWING IS THE SOLE PROPERTY OF 《DIE ERSTE INDUSTRY CO., LTD.》 . ANY REPRODUCTION IN PART OR AS A WHOLE WITHOUT THE WRITTEN PERMISSION OF 《DIE ERSTE INDUSTRY CO.,LTD.》 IS PROHIBITED.